INTRODUCTION TO FLUID MECHANICS

Department of Chemical Engineering

CHEM ENG 2O04
Course Notes

TURBOMACHINERY – Part II

Fox & McDonald
10th & 9th editions: 10.1 to 10.4

PIPE-FLO
Tutorial #8 'Centrifugal Pumps'
Tutorial #9 'Piping Networks'
Tutorial #10 'The Saturn V Rocket'

"It is no good getting furious if you get stuck. What I do is keep thinking about the problem but work on something else. Sometimes it is years before I see the way forward. In the case of information loss and black holes, it was 29 years."

Stephen Hawking

Radial flow pumps

- Flow enters at the ‘eye’ of the pump
- Flow is forced outwards, radially, by rotating blades

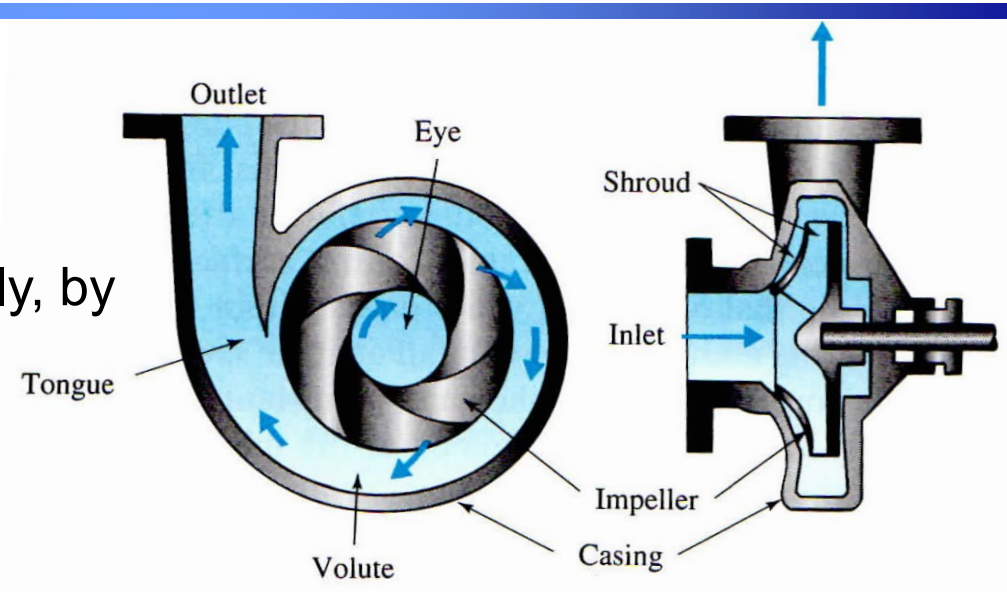

FIGURE 12.1 Single-suction pump.

Characteristics:

- Most common pump
- High flow rate at relatively (vs PD pump) low pressure
- Capable of producing a large ‘head flow’ (to overcome large Δz)
- Flow rate depends inversely on pressure head

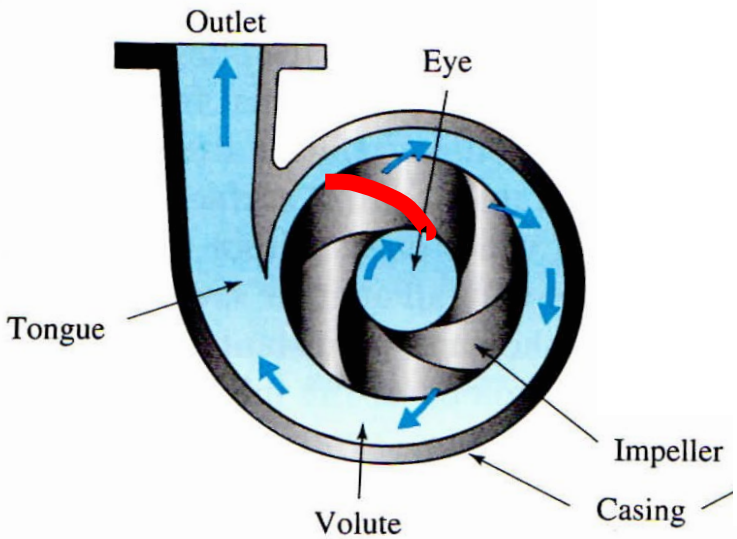

FIGURE 12.1 Single-suction pump.

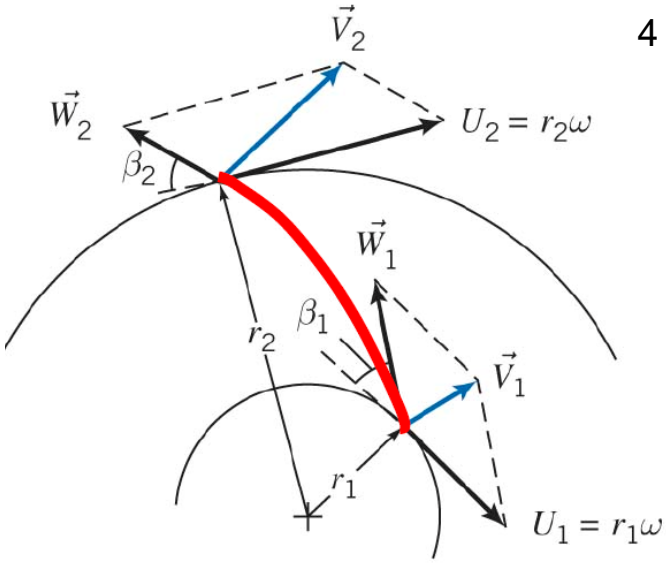

(*a*) Absolute velocity as sum of velocity relative to blade and rotor velocity

Fig. 10.7

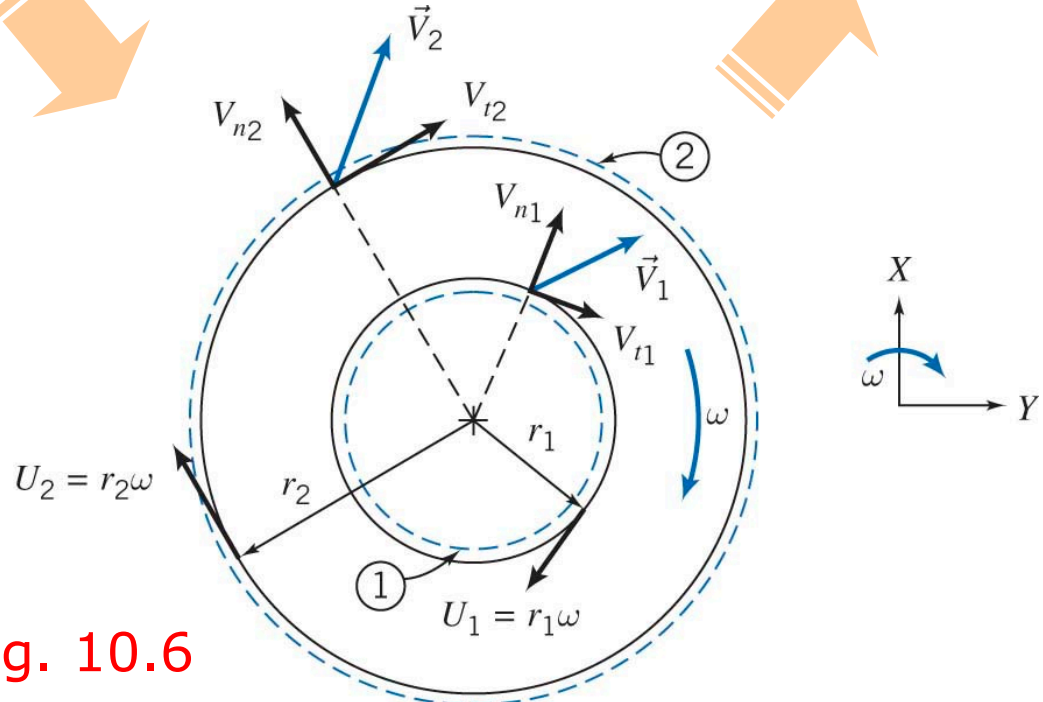

Fig. 10.6

Design equation based on conservation of angular momentum – refer to textbook sections 10.2 and 10.3 for full derivation and note the following:

- Control volume encloses the rotor
- Assumes steady frictionless flow with uniform flow at inlet and outlet

$$\boxed{H_P = \frac{U_2^2}{g} - \left(\frac{U_2 \cot \beta_2}{\pi D_2 w g}\right) Q}$$

Eqn 10.18a

U_2 = tangential speed of impeller at outlet

$U_2 = \omega R_2$ where ω = rotor speed

R_2 = outer impeller radius

β_2 = blade exit angle

D_2 = outer impeller diameter

w = impeller width

Q = volumetric flow rate

g = gravitational constant

Think of $y = mx + b$

•For Q = 0,

$$H_P = \frac{U_2^2}{g}$$

"Shutoff head"

Relationship between blade angle and pump head, H_p, as a function of flow rate, Q.

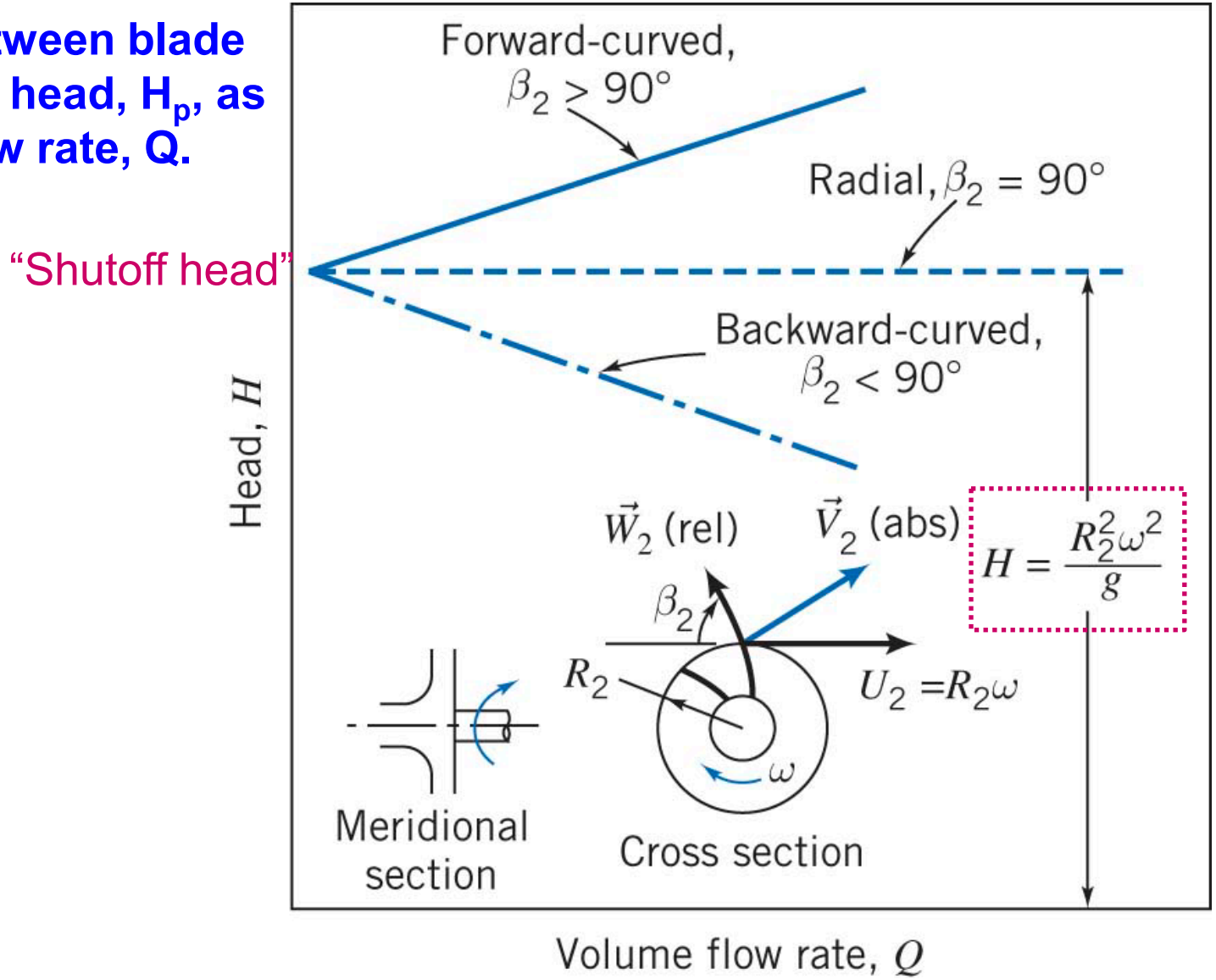

Fig. 10.12

Design equation based on conservation of angular momentum – refer to textbook sections 10.2 and 10.3 for full derivation and note the following:

- Control volume encloses the rotor
- Assumes steady frictionless flow with uniform flow at inlet and outlet

$$\boxed{H_P = \frac{U_2^2}{g} - \left(\frac{U_2 \cot \beta_2}{\pi D_2 w g}\right) Q}$$

Eqn 10.18a

U_2 = tangential speed of impeller at outlet

$U_2 = \omega R_2$ where ω = rotor speed

R_2 = outer impeller radius

β_2 = blade exit angle

D_2 = outer impeller diameter

w = impeller width

Q = volumetric flow rate

g = gravitational constant

Recall the trigonometric function

$$\cot \beta = \frac{\cos \beta}{\sin \beta}$$

Think of $y = mx + b$

- Linear variation of head, H, with flow rate, Q
- 'slope' depends on sign of $\cot\beta_2$

Relationship between blade angle and pump head, H_p, as a function of flow rate, Q.

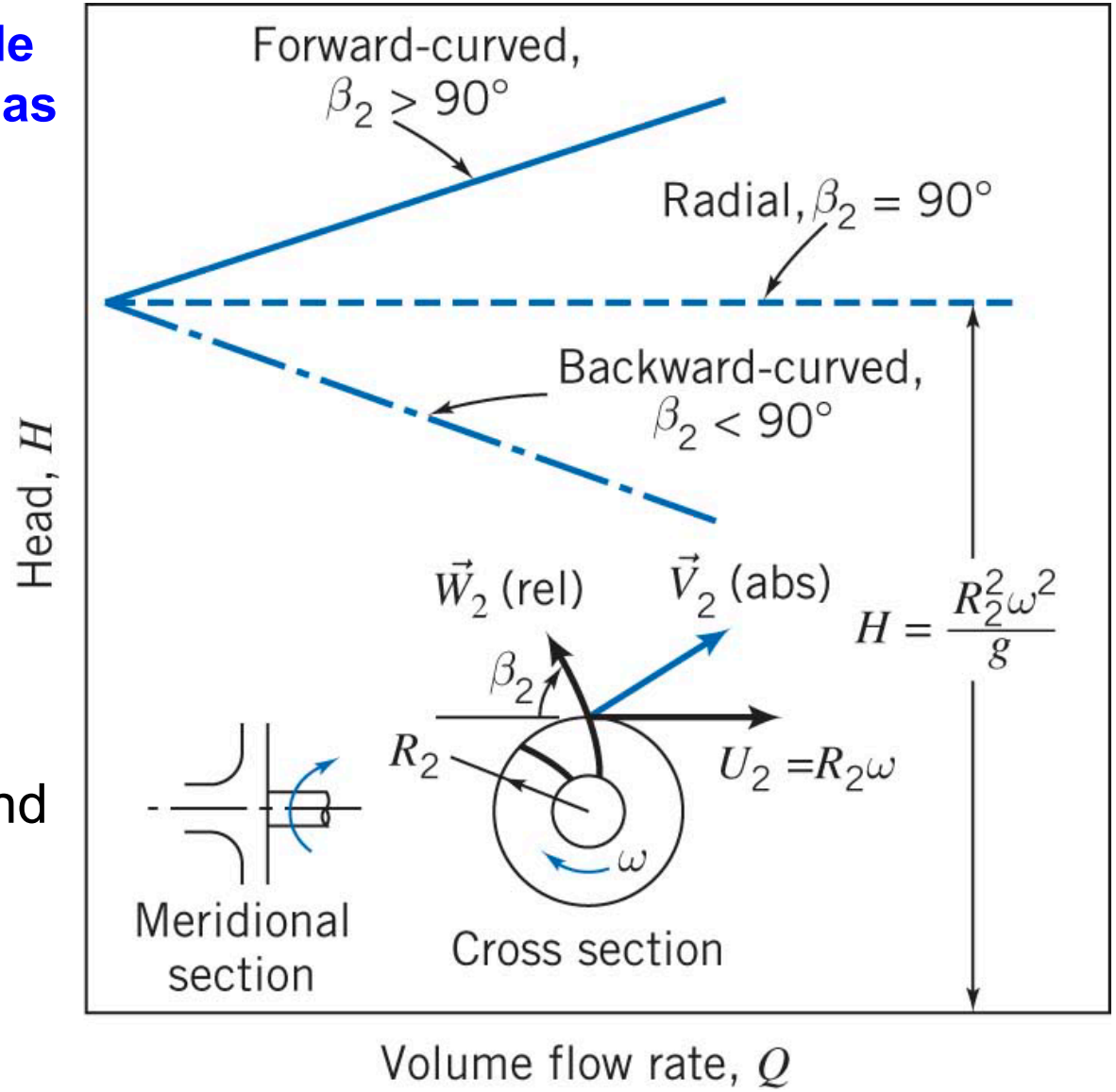

Fig. 10.12

- "Forward-curved vanes are almost never used in practice because they tend to have an unstable operating point"

- **Pumps are usually designed with $\beta_2 < 90°$ (backward-curved)**

For real fluid flow, only an approximate linear variation due to:

- Fluid leakage
- Friction
- Turbulence/secondary flow

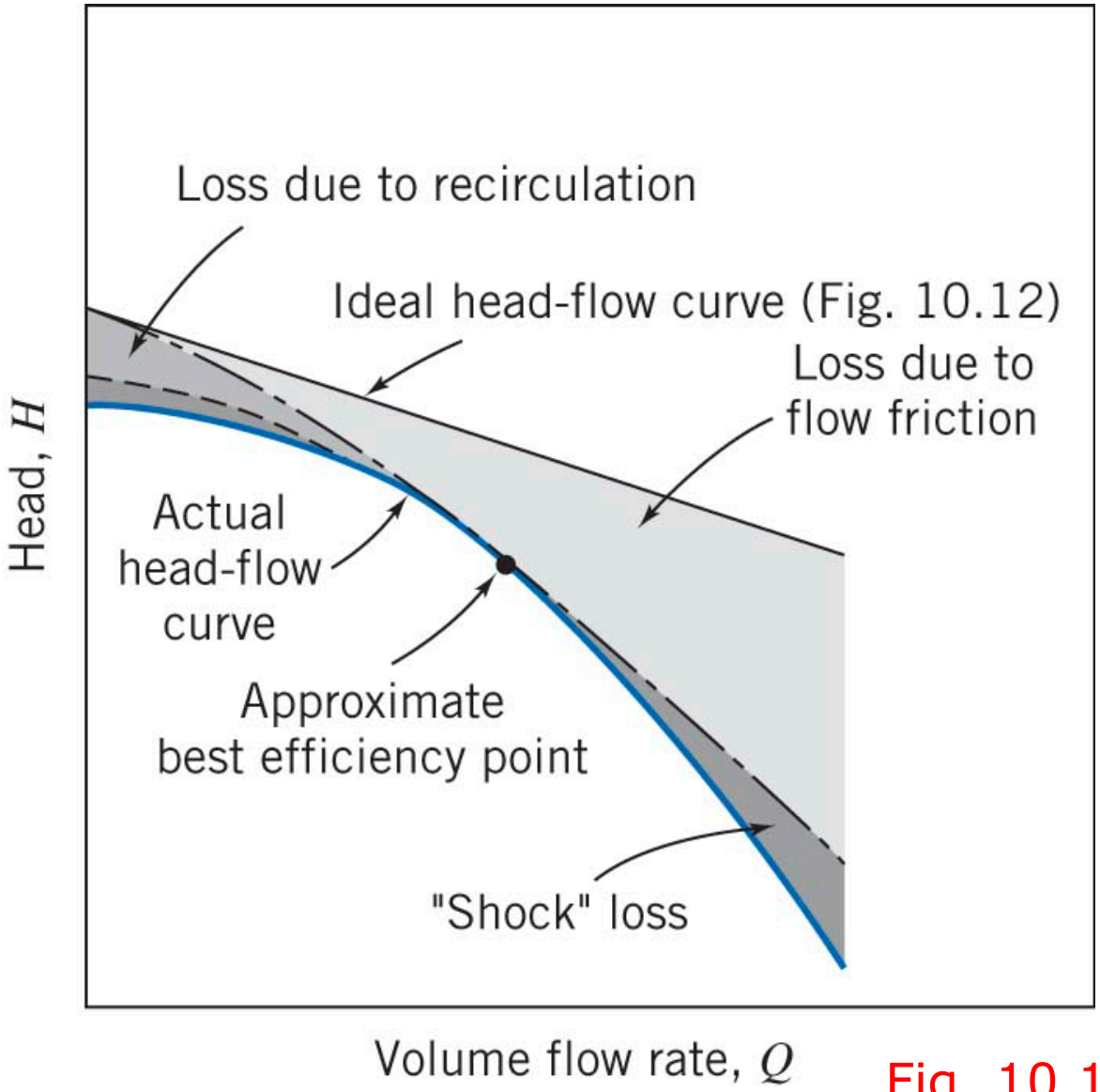

Fig. 10.13

For real fluid flow, only an approximate linear variation due to:

- Fluid leakage
- Friction
- Turbulence/secondary flow

Typically
$H = a - bQ^2$
where a and b are 'best fit' parameters of experimental data (see Example 10.5)

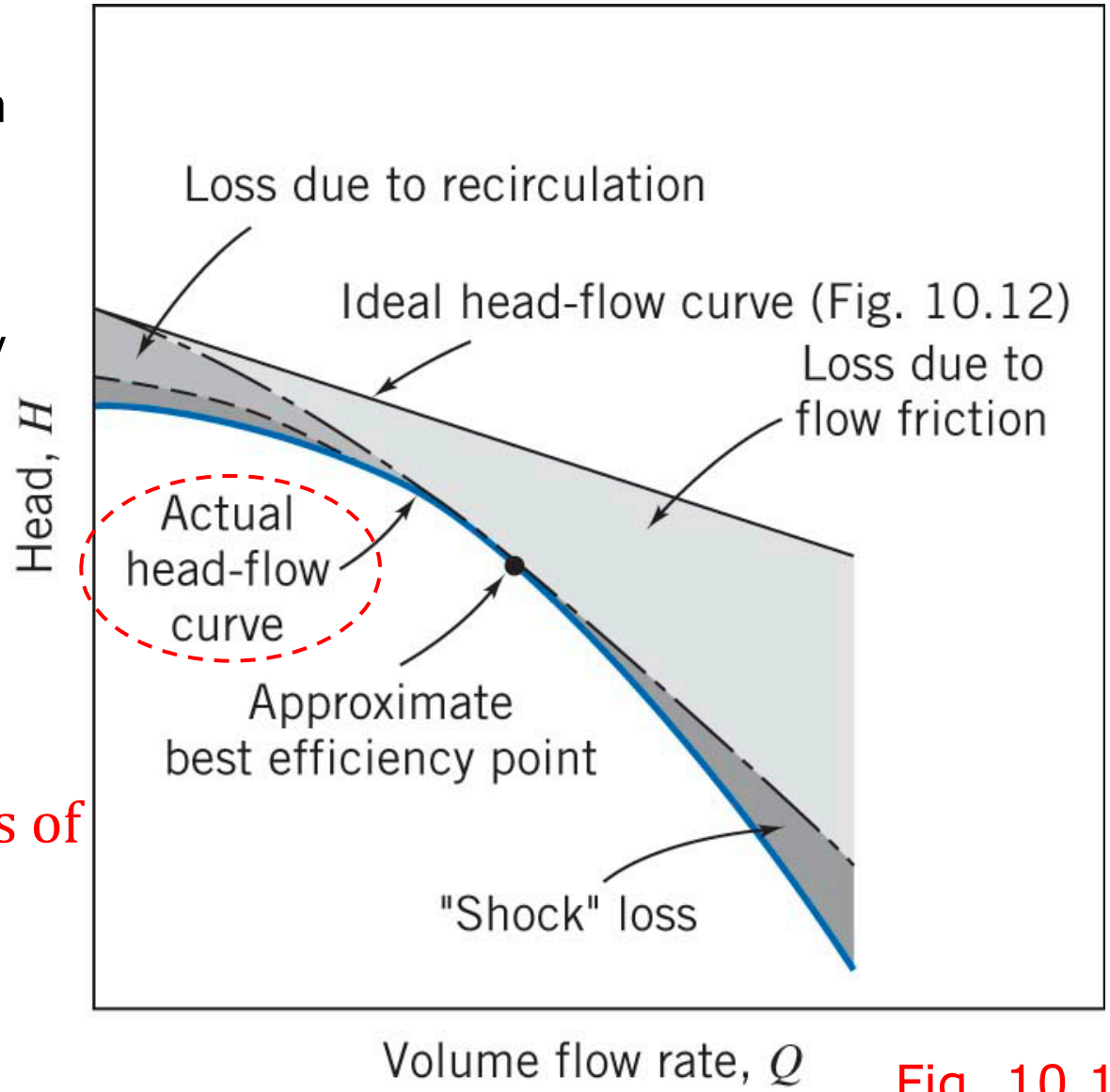

Fig. 10.13

- Example 10.5 – "Curve-Fit to Pump Performance Data"
  - The curve fit may be obtained by fitting H vs Q^2

$$H(ft) = 127 - 4.23 \times 10^{-5} \left[Q(gpm) \right]^2$$

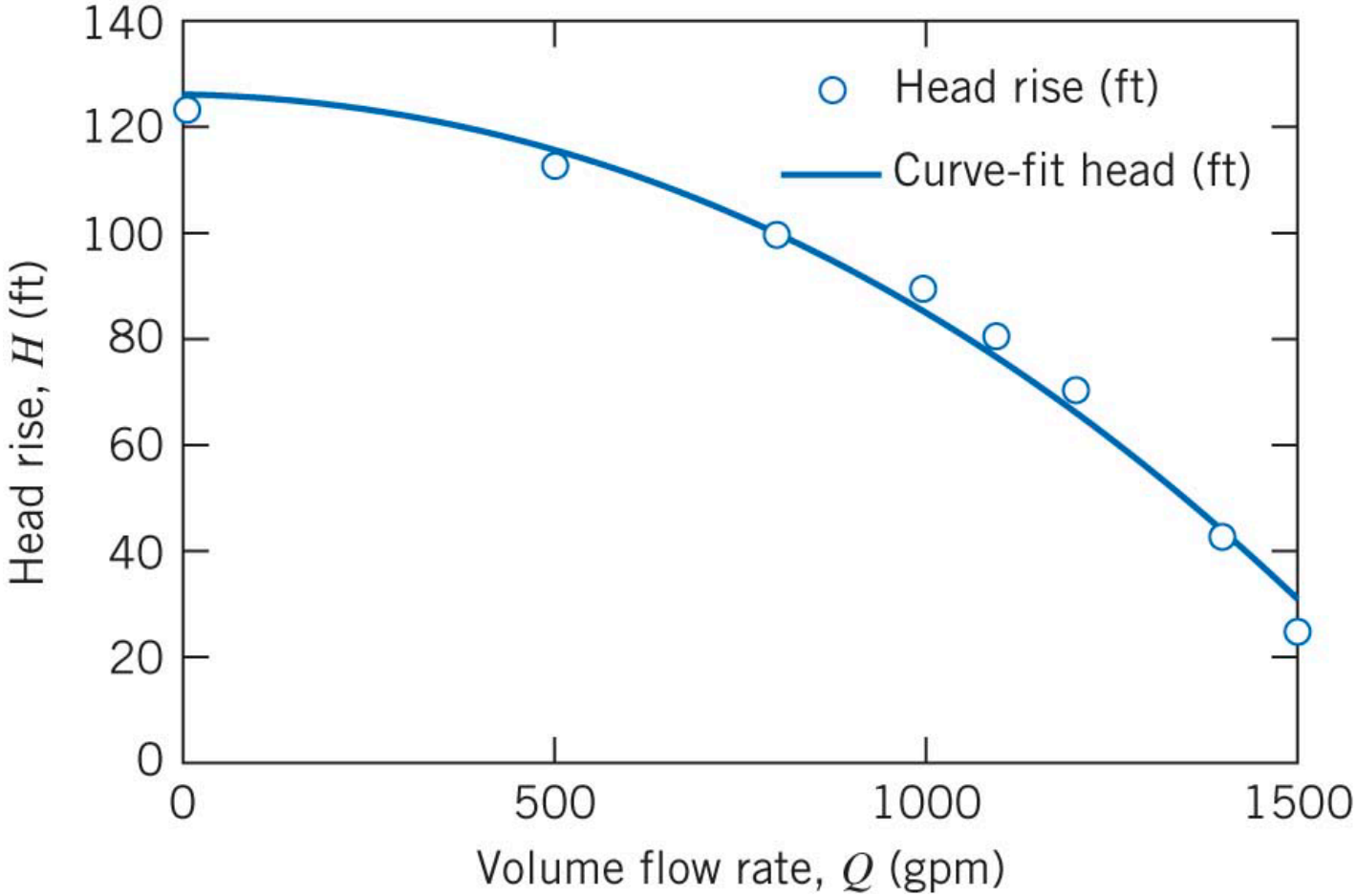

It is common practice to vary pump capacity by changing the impeller size in a given casing; to present information compactly, data from tests of several impeller diameters will be plotted on a single graph.

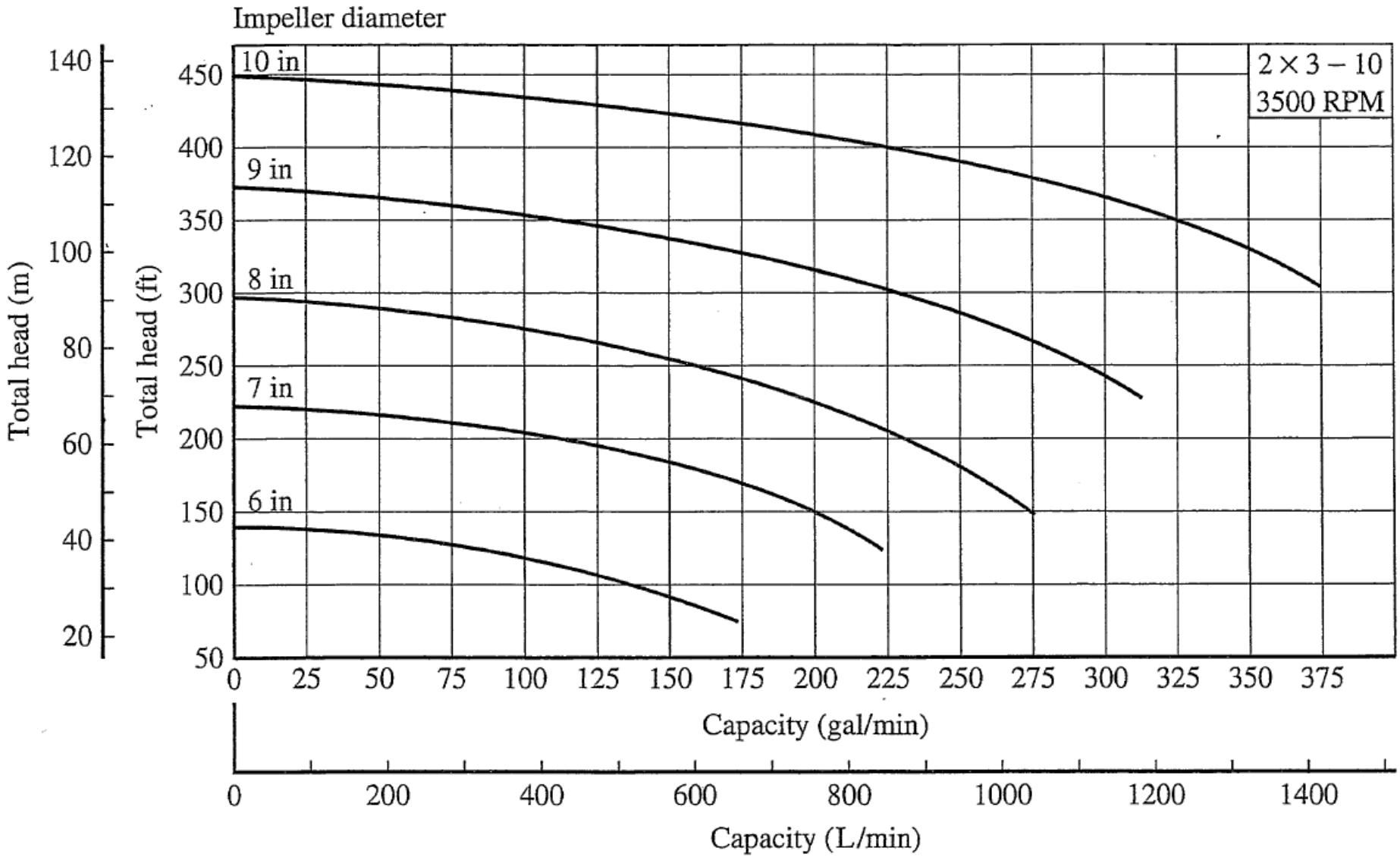

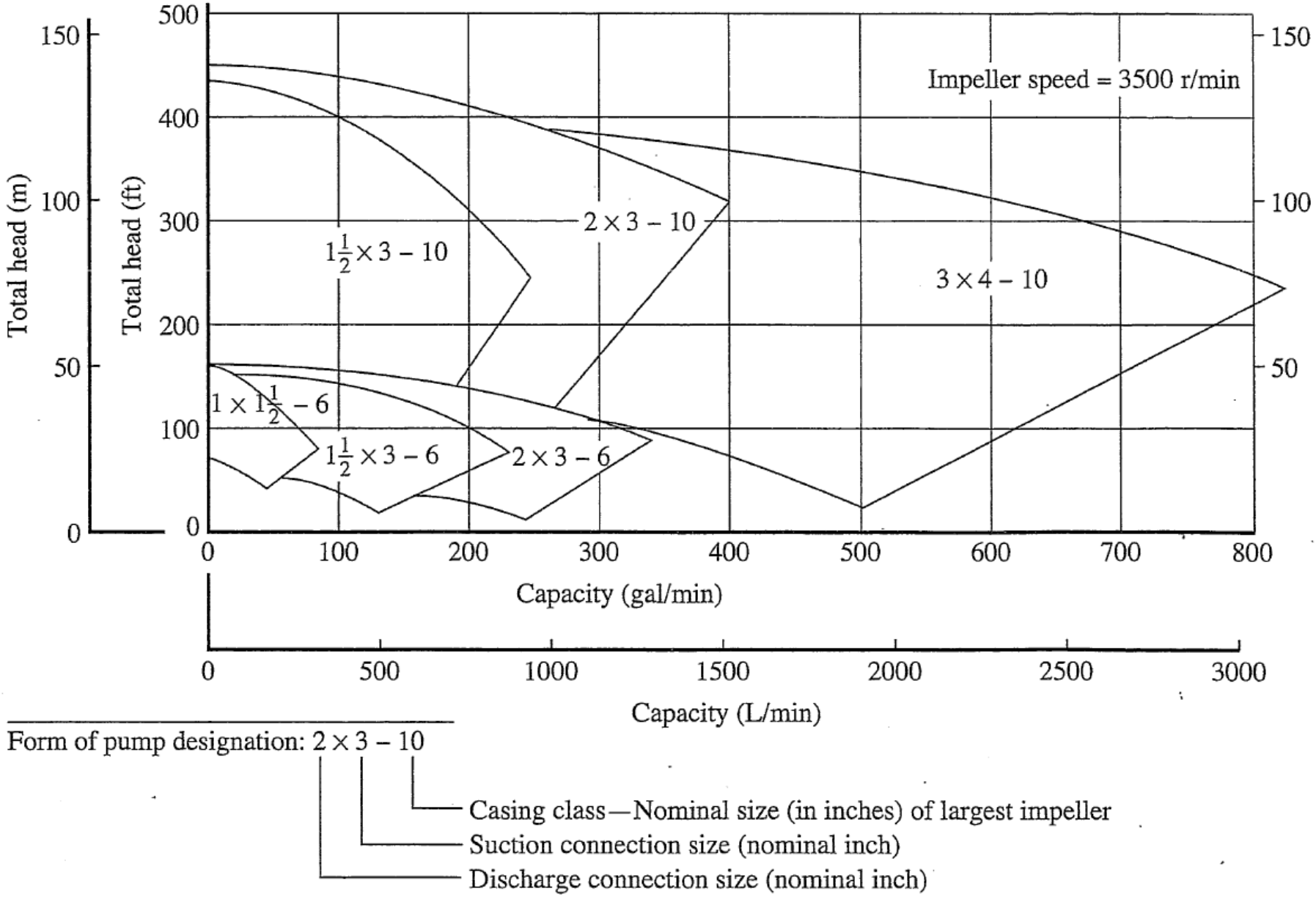

Form of pump designation: $2 \times 3 - 10$

- Casing class—Nominal size (in inches) of largest impeller
- Suction connection size (nominal inch)
- Discharge connection size (nominal inch)

FIGURE 13.22 Composite rating chart for a line of centrifugal pumps.

Performance of real pumps are determined experimentally!!

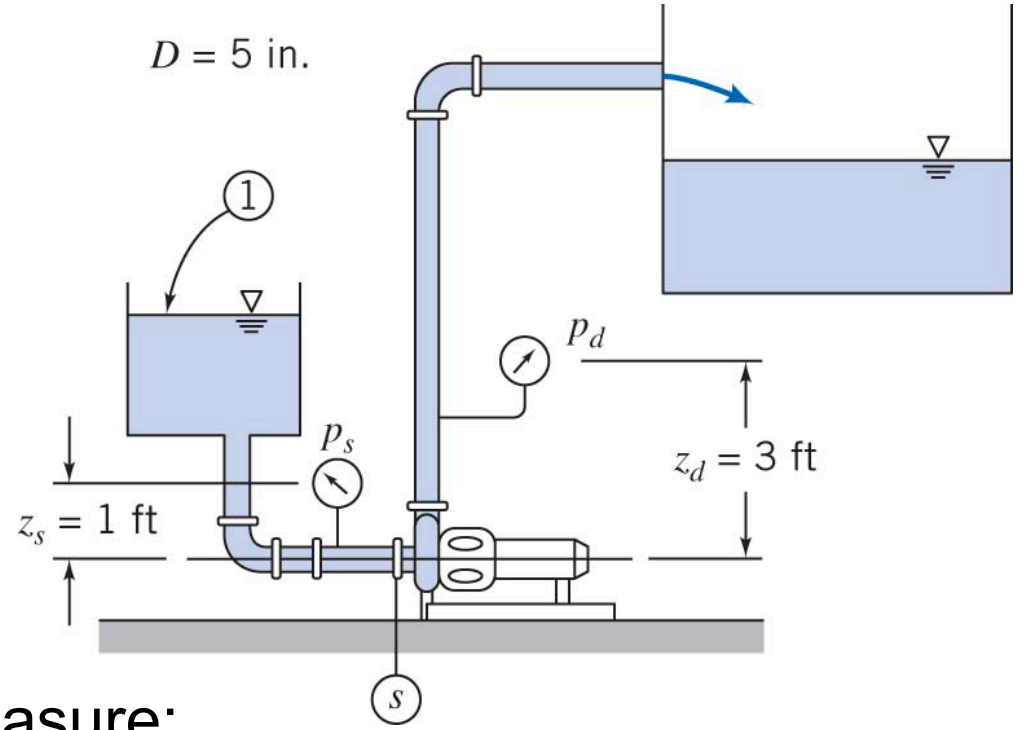

Use test stand that can measure:

1. Flow rate – Calculate fluid velocities using diameters of suction and discharge lines
2. Pressure rise – use pressure gauges (@ fixed elevations) upstream and downstream
3. Power input

Radial flow pumps

- Flow enters at the ‘eye’ of the pump
- Flow is forced outwards, radially, by rotating blades

Characteristics:

- Most common pump
- High flow rate at relatively (vs PD pump) low pressure
- Capable of producing a large ‘head flow’ (to overcome large Δz)
- Flow rate depends inversely on pressure head

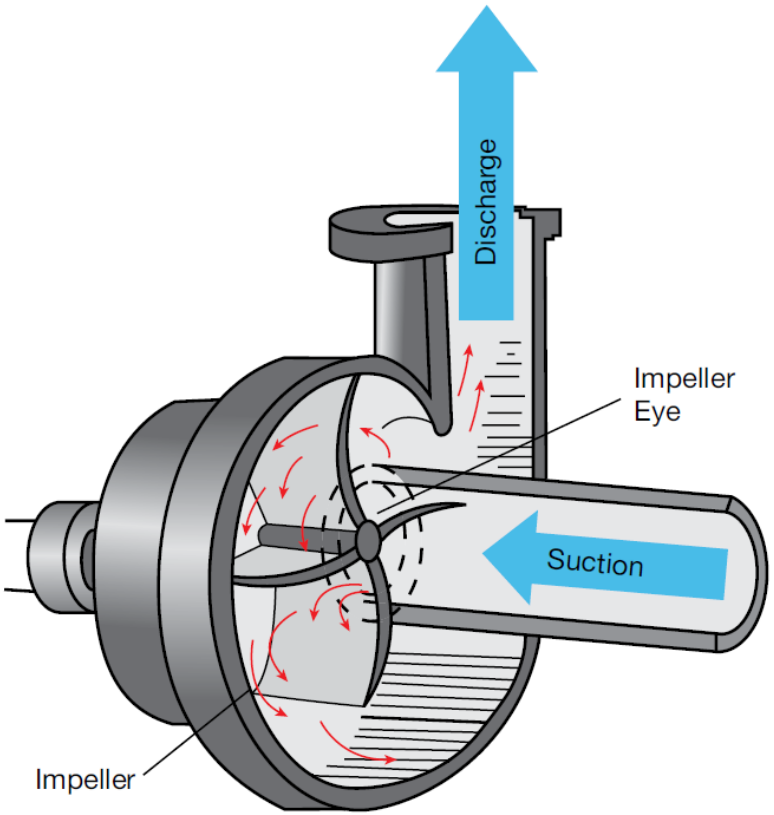

▲ **Figure 1.** In a centrifugal pump, a rotating impeller imparts energy to the liquid moving through the pump.

Here is a good video by a company called Gorman-Rupp pumps: https://www.youtube.com/watch?v=2FA6t7wHtF0&feature=related

CAUTION!

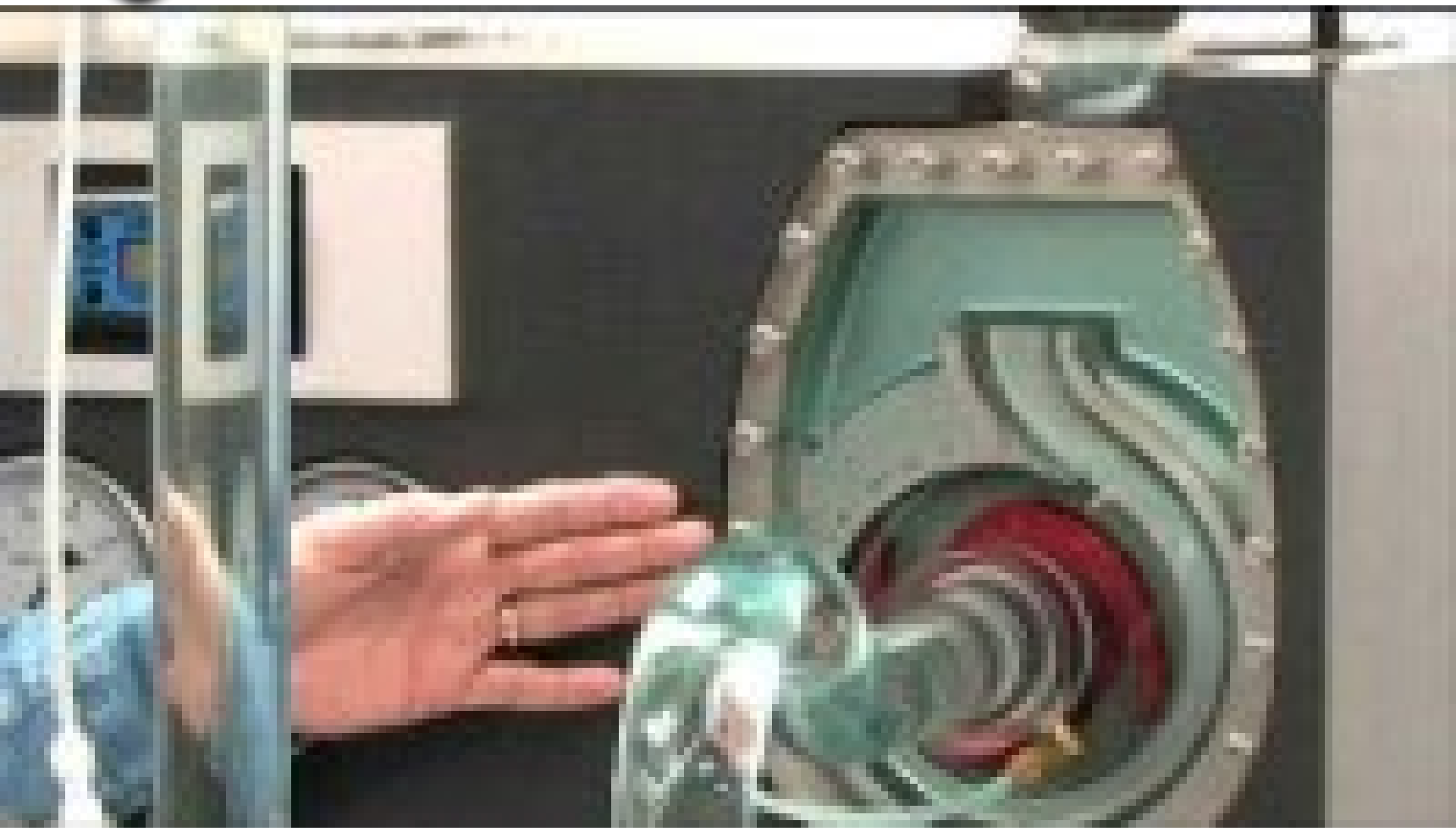

Example 10.4

Flow Rate Q (gpm)	Input Power Wm (hp)	Suction Pressure (psi)	Suction Elevation (ft)	Discharge Pressure (psi)	Discharge Elevation (ft)
0	15.1	0.65	1	53.3	3
500	22.0	0.25	1	48.3	3
800	26.1	-0.35	1	42.3	3
1000	28.5	-0.92	1	36.9	3
1100	29.6	-1.24	1	33	3
1200	30.5	-1.62	1	27.8	3
1400	32.0	-2.42	1	15.3	3
1500	32.8	-2.89	1	7.3	3

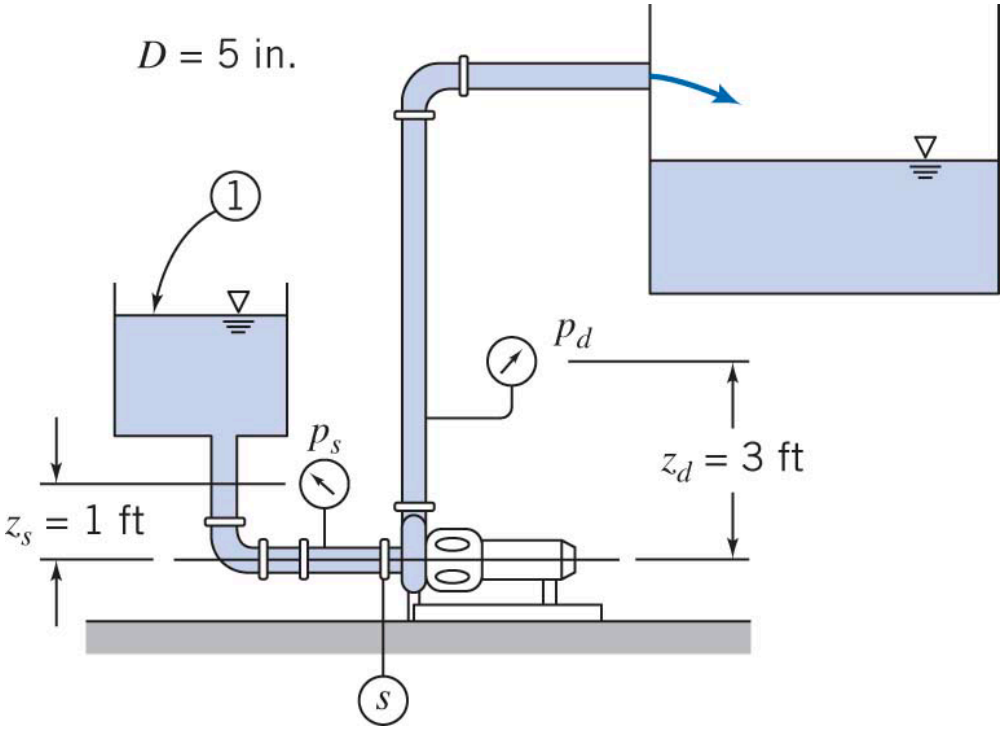

Example 10.4

Flow Rate	Input Power	Suction		Discharge		Pump Head
Q	Wm	Pressure	Elevation	Pressure	Elevation	Hp
(gpm)	(hp)	(psi)	(ft)	(psi)	(ft)	(ft)
0	15.1	0.65	1	53.3	3	123.4
500	22.0	0.25	1	48.3	3	112.8
800	26.1	-0.35	1	42.3	3	100.3
1000	28.5	-0.92	1	36.9	3	89.2
1100	29.6	-1.24	1	33	3	80.9
1200	30.5	-1.62	1	27.8	3	69.8
1400	32.0	-2.42	1	15.3	3	42.8
1500	32.8	-2.89	1	7.3	3	25.5

Example 10.4

Flow Rate	Input Power	Suction		Discharge		Pump Head	Hydraulic Power
Q	Wm	Pressure	Elevation	Pressure	Elevation	Hp	Wh
(gpm)	(hp)	(psi)	(ft)	(psi)	(ft)	(ft)	(hp)
0	15.1	0.65	1	53.3	3	123.4	0.0
500	22.0	0.25	1	48.3	3	112.8	14.3
800	26.1	-0.35	1	42.3	3	100.3	20.3
1000	28.5	-0.92	1	36.9	3	89.2	22.6
1100	29.6	-1.24	1	33	3	80.9	22.5
1200	30.5	-1.62	1	27.8	3	69.8	21.2
1400	32.0	-2.42	1	15.3	3	42.8	15.2
1500	32.8	-2.89	1	7.3	3	25.5	9.7

Example 10.4

Flow Rate	Input Power	Suction		Discharge		Pump Head	Hydraulic Power	Efficiency
Q	Wm	Pressure	Elevation	Pressure	Elevation	Hp	Wh	ηp
(gpm)	(hp)	(psi)	(ft)	(psi)	(ft)	(ft)	(hp)	(%)
0	15.1	0.65	1	53.3	3	123.4	0.0	0
500	22.0	0.25	1	48.3	3	112.8	14.3	65
800	26.1	-0.35	1	42.3	3	100.3	20.3	78
1000	28.5	-0.92	1	36.9	3	89.2	22.6	79
1100	29.6	-1.24	1	33	3	80.9	22.5	76
1200	30.5	-1.62	1	27.8	3	69.8	21.2	69
1400	32.0	-2.42	1	15.3	3	42.8	15.2	47
1500	32.8	-2.89	1	7.3	3	25.5	9.7	29

Figure 10.14

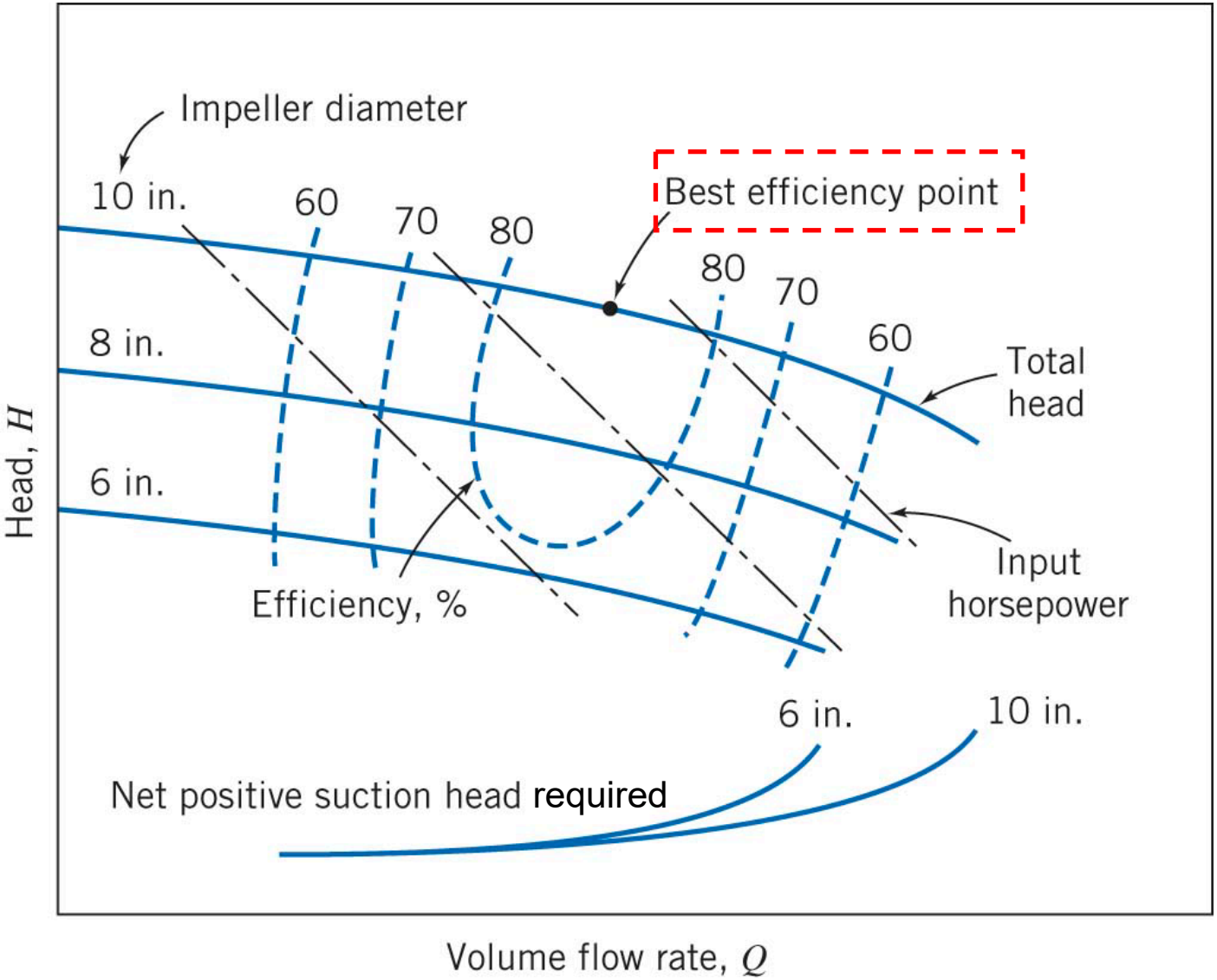

Efficiency contours are plotted by joining points having the same numerical value.

Pump Data Sheet - Kinetic Pump

Company: Kinetic Pump
Name:
Date: 12/29/2008

Powered By PUMP-FLO

Pump:

Size: DNJ 6x8x16

Type: CCE
Synch speed: 1500 rpm

Speed: 1450 rpm
Dia: 409 mm

Curve:

Impeller:

Specific Speeds:

Ns: ---
Nss: ---

Dimensions:

Suction: ---
Discharge: ---

Pump Limits:

Temperature: 225 °F
Pressure: 175 psi g
Sphere size: ---

Power: ---
Eye area: ---

Search Criteria:

Flow: ---

Head: ---

Fluid:

Water
Density: 62.37 lb/ft³
Viscosity: 1.105 cP

Temperature: 60 °F
Vapor pressure: 0.2563 psi a
Atm pressure: 14.7 psi a

NPSHa: ---

Motor:

Standard: NEMA
Enclosure: TEFC
Sizing criteria: Max Power on Design Curve

Size: 125 hp
Speed: 1500
Frame: 444T

---- Data Point ----

Flow:	1720 US gpm
Head:	174 ft
Eff:	84%
Power:	90.1 hp
NPSHr:	10.1 ft

---- Design Curve ----

Shutoff head:	195 ft
Shutoff dP:	84.6 psi
Min flow:	---
BEP:	84% @ 1720 US gpm
NOL power:	113 hp @ 2774 US gpm

-- Max Curve --

Max power: 113 hp @ 2774 US gpm

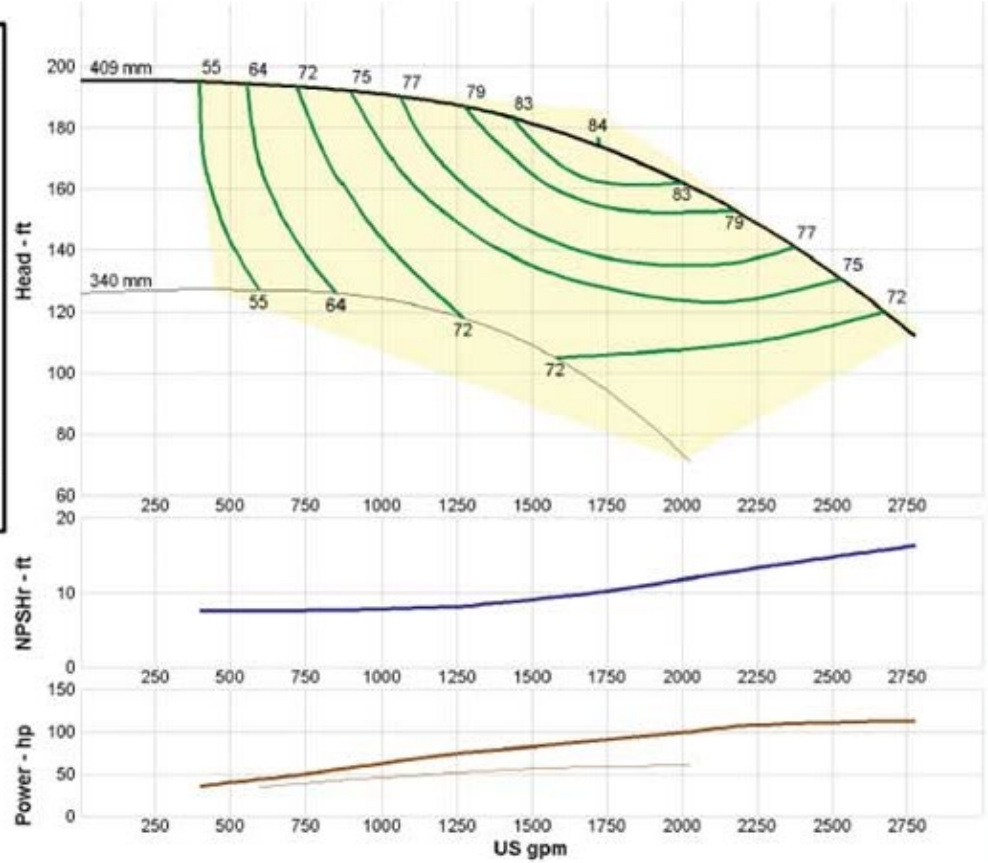

Performance Evaluation:

KINETIC PUMP
CENTRIFUGAL PUMPS

PIPE-FLO has pump catalogs from over 100 suppliers

PUMP SELECTION

Engineering application:

Match the machine (pump) and system characteristics

&

Satisfy efficiency, cost, & durability constraints

From before ('pumps – part II'):

- Pump head (measured using test rig) decreases as flow rate increases

BUT

- The head required for a system to maintain flow increases as flow rate increases

System curve = friction (approximately parabolic with Q)

+

gravity (independent of Q)

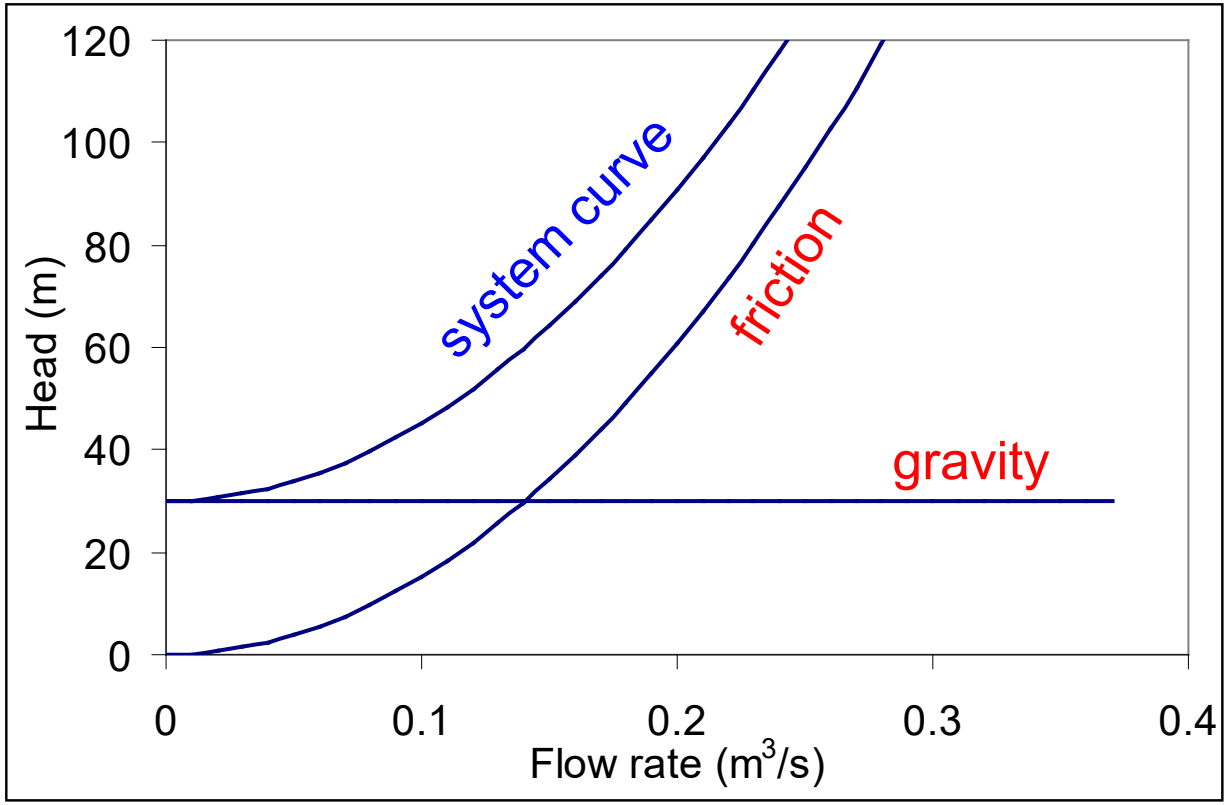

Operating point (aka Duty point) = Flow rate at which pump and system head are perfectly matched

This is a stable system; what happens as the flow rate deviates from the operating point?

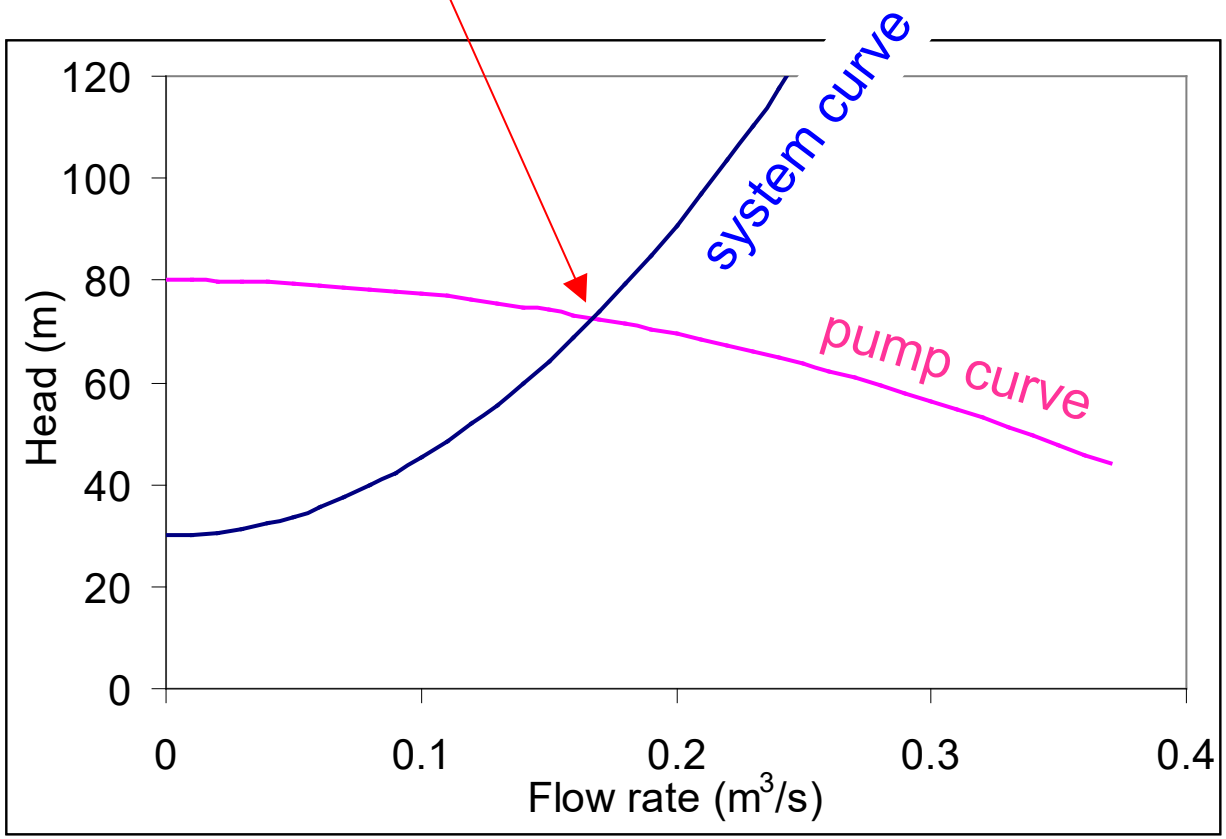

Carefully review Example 10.8 'Finding the operating point for a pumping system'

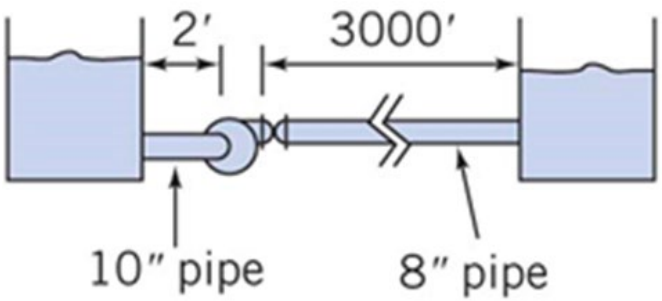

$$= \left(K_{ent} + f_1 \frac{L_1}{D_1}\right) \frac{\overline{V}_2^2}{2g} \left(\frac{D_2}{D_1}\right)^4 + \left(f_2 \frac{L_2}{D_2} + K_{exit}\right) \frac{\overline{V}_2^2}{2g}$$

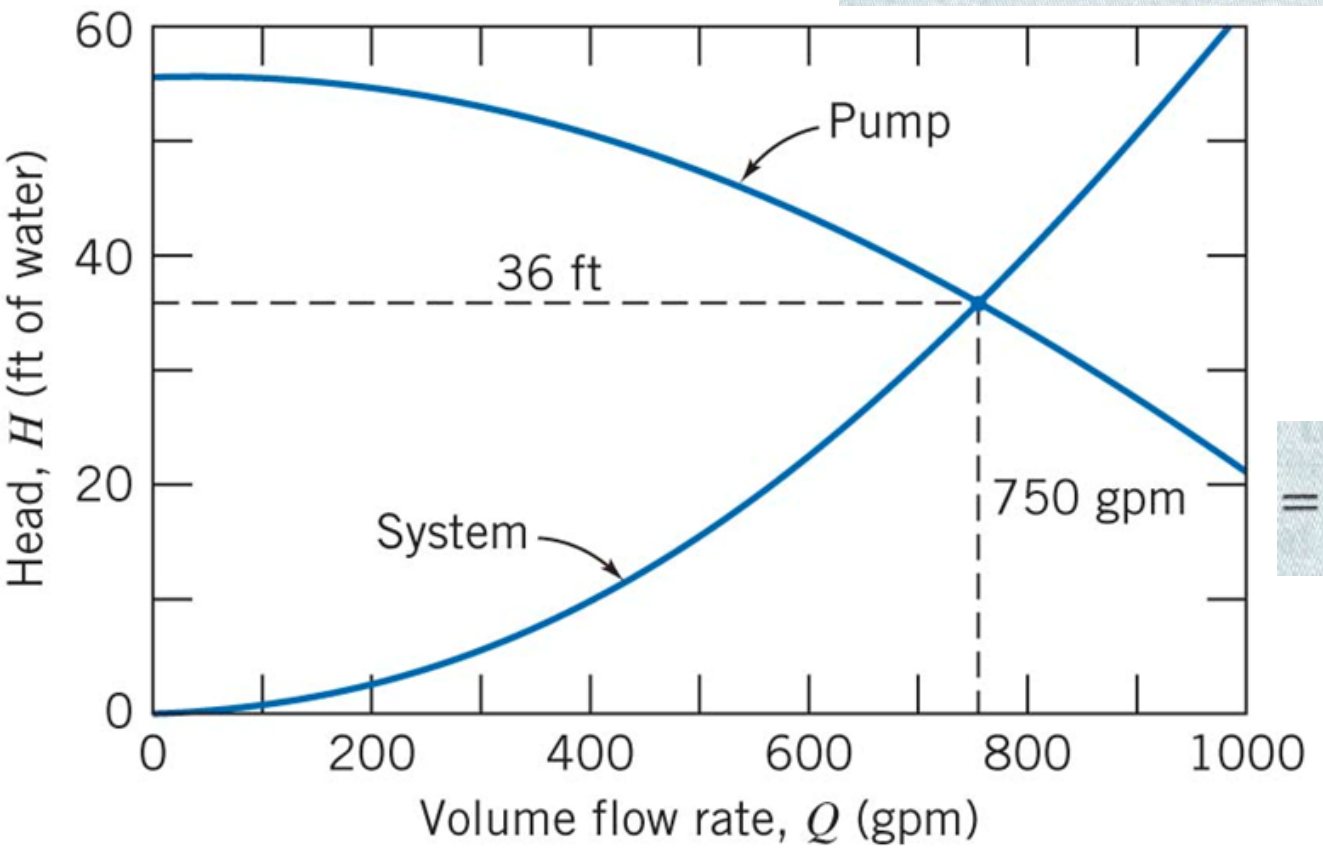

$$= H_0 - AQ^2$$

Pump Sizing: Bridging the Gap Between Theory and Practice

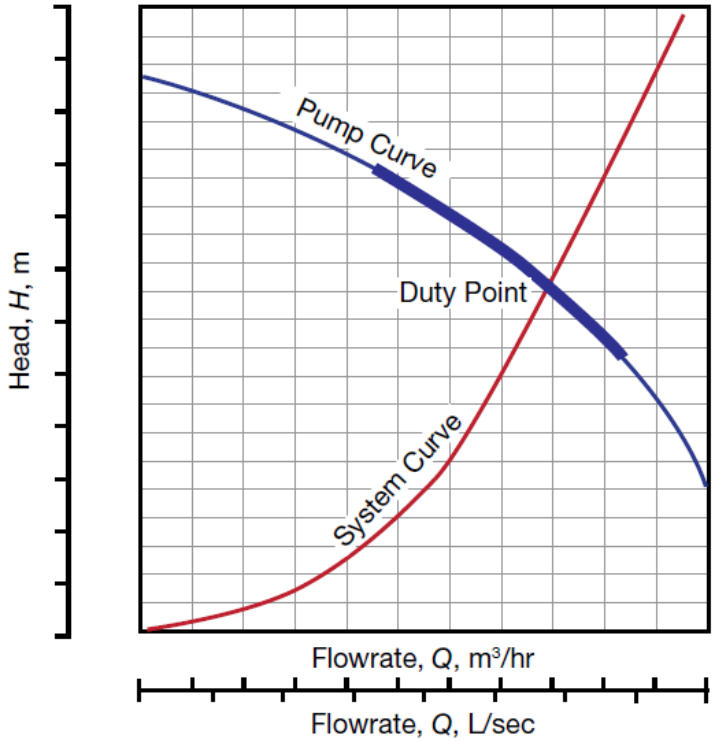

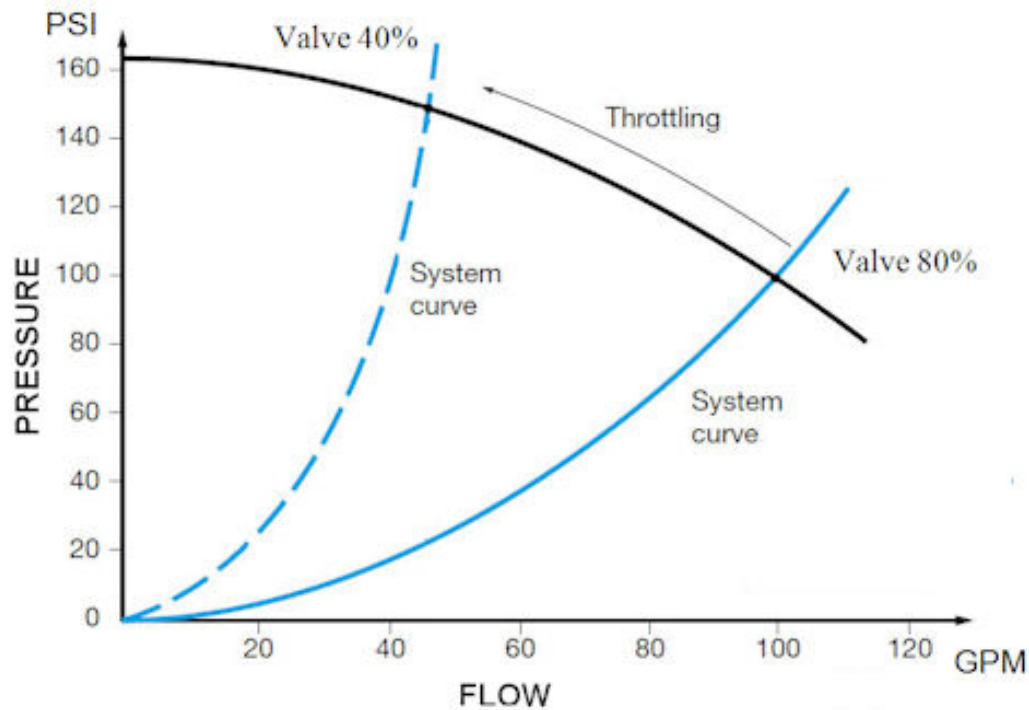

▲ **Figure 4.** A basic pump curve plots pressure (or head) as a function of flowrate.

Copyright © 2016 American Institute of Chemical Engineers (AIChE)

- Read the article titled '**Selecting the Proper Centrifugal Pump Circuit Flow Control' (published Sept 2019) that is posted on Avenue**

"Beyond the wheel, the most important mechanical equipment serving humanity is the centrifugal pump. Centrifugal pumps make modern quality of life possible. Turn on a faucet and a centrifugal turbine pump provides the water. Do you have a dishwasher, clothes washer, or sump pump at home? Each of these employ centrifugal pumps. It's important to select the best pump control method to provide a properly operating, energy-efficient, and reliable pumping system."

Be sure to review the characteristics, advantages, and disadvantages of the following control methods:

- On-Off Control
- Two-Speed Control
- Throttle Valve Control
- Bypass Valve Control
- Variable Frequency Drive (VFD) Control
- Parallel Pump Control

- Read the article titled '**Selecting the Proper Centrifugal Pump Circuit Flow Control' (published Sept 2019) that is posted on Avenue**

"Beyond the wheel, the most
humanity is the centrifugal pu
of life possible. Turn on a fau
the water. Do you have a dis
home? Each of these employ
best pump control method to
and reliable pumping system

Be sure to review the ch
of the following control n

- On-Off Control
- **Two-Speed Control**
- Throttle Valve Control
- Bypass Valve Control
- Variable Frequency D
- Parallel Pump Control

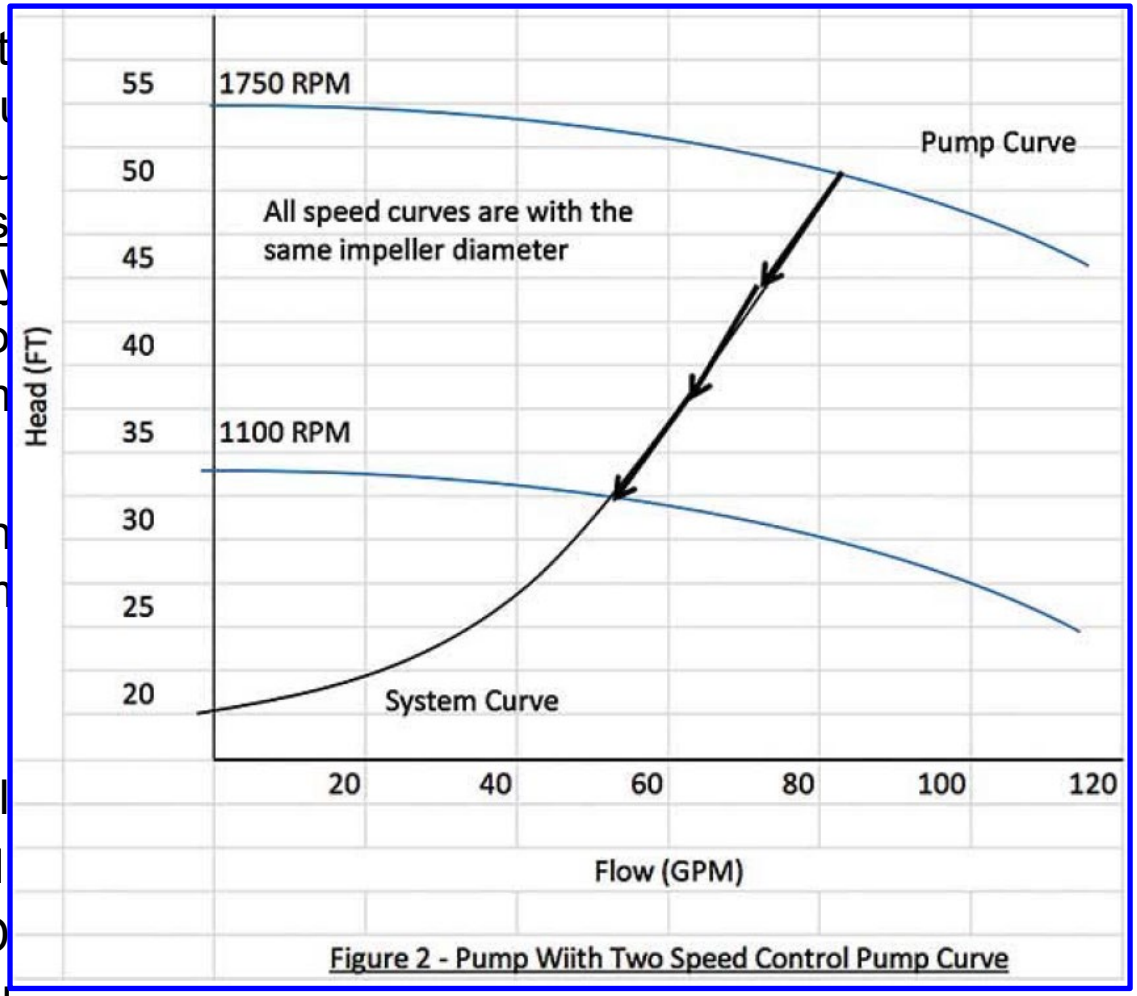

Figure 2 - Pump Wiith Two Speed Control Pump Curve

Real systems:

1. As systems “age”:
   a. Pump wear causes decrease in performance (i.e. produces less pressure head)
   b. System head increases (remember age effects on friction)
2. Increased fluid v
   pump performan

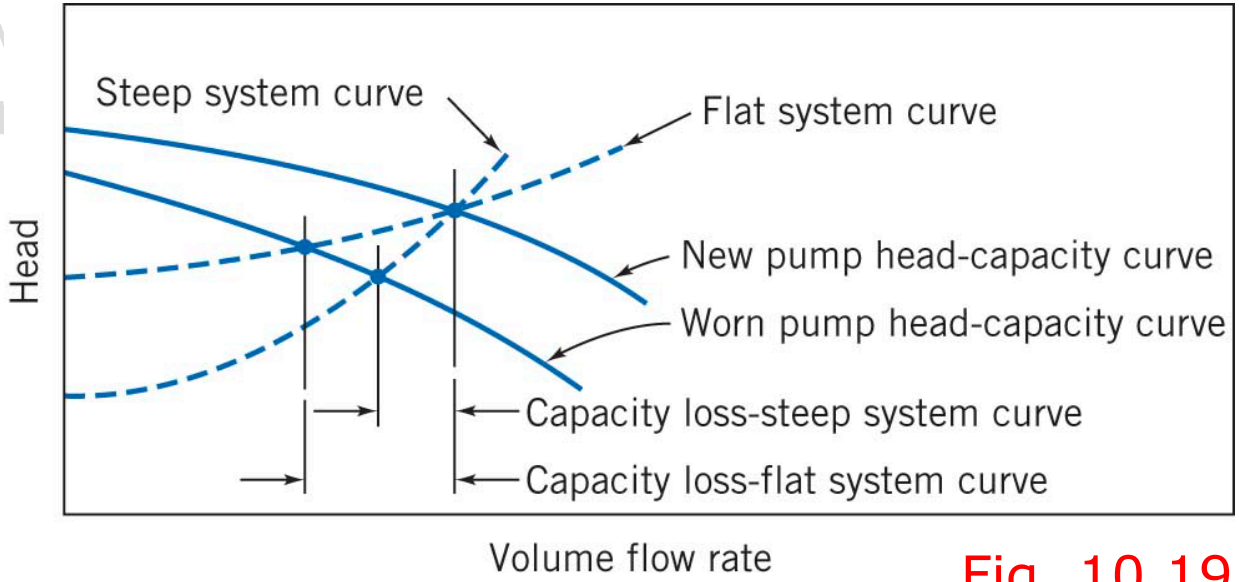

Fig. 10.19

Real systems:

1. As systems "age":
   a. Pump wear causes decrease in performance (i.e. produces less pressure head)
   b. System head increases (remember age effects on friction)
2. Increased fluid viscosity can dramatically reduce the pump performance

Fig. 10.22

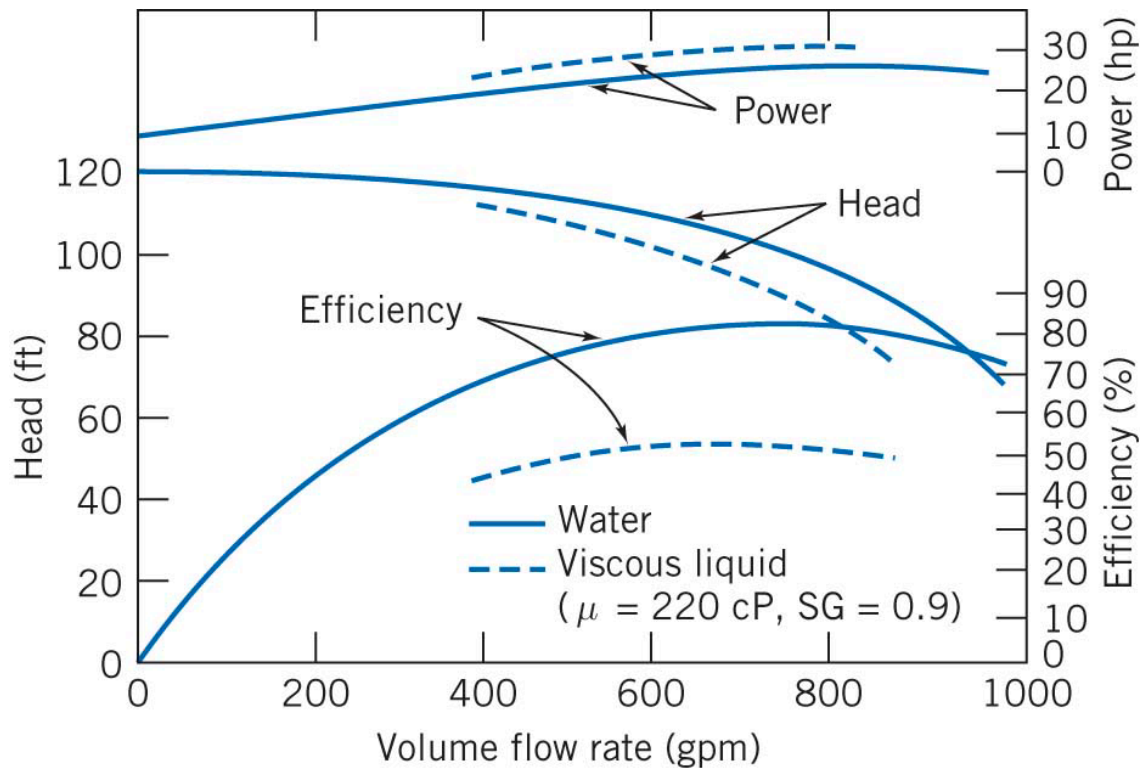

Problems from textbook for self-study

10th Edition	9th Edition
10.8	10.18
10.11	10.29
10.13	10.44
10.17	10.50
10.18	10.54

PIPE-FLO

Tutorial #8 'Centrifugal Pumps'

Tutorial #9 'Piping Networks'

Tutorial #10 'The Saturn V Rocket'